27 Magnetic armatures

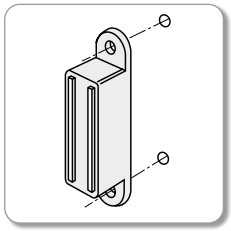

Magnetic door locks

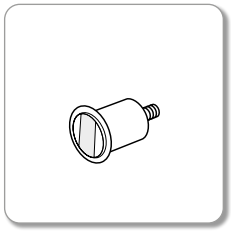

Magnetic door locks

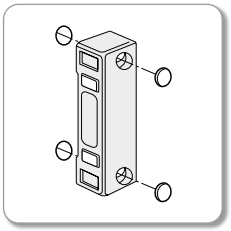

Magnetic door locks

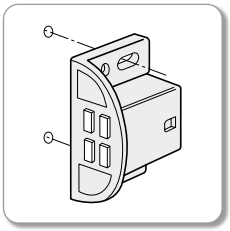

Special-purpose magnetic door locks

Press in magnetic door locks

Magnetic catches screwable / lockable

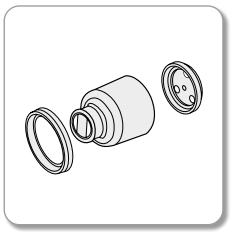

Retaining devices

Magnetic door catch

Magnet with hinge

Edition: 5.2021

MAURER MAGNETIC®

Industriestrasse 8, CH-8627 Grüningen

Tel. 044/936 60 30, Fax 044/936 60 48
www.maurermagnetic.com/en

Magnetic armatures

Sandwich magnets

Sandwich magnets made of hard ferrites can be used as pull-type for various purposes. They consist of a magnet and two zinc coated fixed pole-plates, sealed in black plastic.

Dimensions				Stock no.	Pull	Counter plate
A	B	C	G		N	
32.0	10.5	24.0	16.5	**BS3**	30	Q4 / CPR4
45.0	10.5	37.0	29.5	**BS6**	60	Q6
62.0	10.5	54.0	46.5	**BS10**	100	Q10

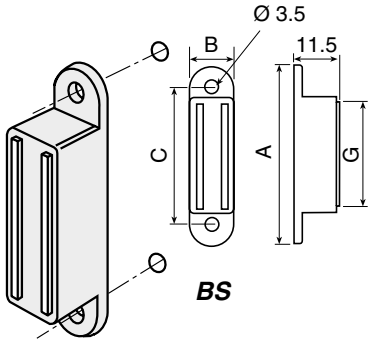

For counter plates please see chapter 28

Edition: 5.2020
MAURER MAGNETIC®
Industriestrasse 8, CH-8627 Grüningen
Tel. 044/936 60 30, Fax 044/936 60 48
www.maurermagnetic.com/en

Cylindrical sandwich magnets

Because of their superior field of attraction at a distance and their resistance to vibrations, these magnets can be used for fixing as well as for conveyance. They can be employed at temperatures of up to 100°C.

The types CF12 an CF16 are encased in a brass shell; an integrated plastic screw serves to mount and adjust the magnet. The contact pole is ground.

The type CF22.00 is encased in an Inox shell.
All these types are protected against corrosion, the contact pole is ground.

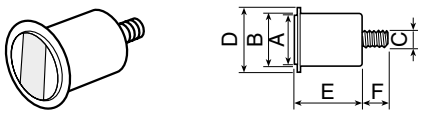

CF .. .0

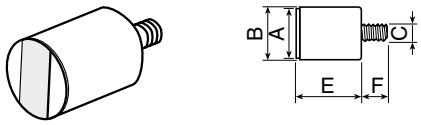

CF .. .00

Dimensions						Stock no.	Pull	Counter plate
A	B	C	D	E	F		N	
12	12.5	M4	16	15.5	8.5	**CF12.0**	40	Serie W
12	12.5	M4		15.0	8.5	**CF12.00**	40	Serie W
16	16.5	M6	20	20.0	8.5	**CF16.0**	90	Serie W
16	16.5	M6		20.0	8.5	**CF16.00**	90	Serie W
22	25.0	M8		31.0	12.0	**CF22.00**	190	Serie W

For counter plates please see chapter 28

Edition: 5.2020
MAURER MAGNETIC®
Industriestrasse 8, CH-8627 Grüningen
Tel. 044/936 60 30, Fax 044/936 60 48
www.maurermagnetic.com/en

Magnetic door locks

These magnetic locks fulfil all the demands of high quality installations. They offer a good field of attraction at a distance. The poles are placed in such a way that they also allow for undiminished attraction if the counter plates are slightly offset.

The 6-Series
The plastic case is made of unbreakable, anti-static and non-ageing plastic material. The types JUNIOR and SENIOR are fitted with caps to mask the screws, which provides a particularly attractive finish.

The 7-Series
The case is rounded on both sides and made of shock-proof plastic material.

Mounting:
to be counter-sunk. The magnets can be rigidly fixed by means of two Ø 3 mm screws.

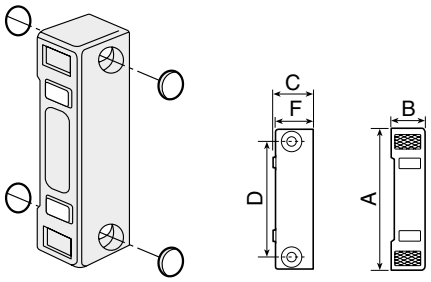

JUNIOR 16/ SENIOR 26

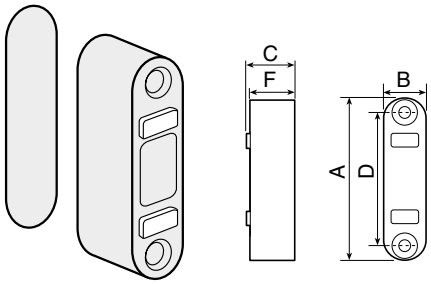

SENIOR 27

Dimensions					*Stock no.*	*Pull*	*Colour*	*Counter plate*
A	*B*	*C*	*D*	*F*		*N*		
46.0	*11.0*	*14.0*	*36*	*13.5*	***JUNIOR 16***	*40*	*W*	*incl.*
50.0	*13.0*	*15.3*	*40*	*14.3*	***SENIOR 26***	*70*	*W*	*incl.*
53.0	*14.2*	*15.5*	*44*	*14.8*	***SENIOR 27***	*70*	*W*	*incl.*

W = white

Edition: 5.2020
MAURER MAGNETIC®
Industriestrasse 8, CH-8627 Grüningen
Tel. 044/936 60 30, Fax 044/936 60 48
www.maurermagnetic.com/en

Serie / MS Series

Mounting:
With two 3 mm round screws, screwed fast either through the round or the oval fastening holes.Oval fastening holes allow for enhanced adjusting.

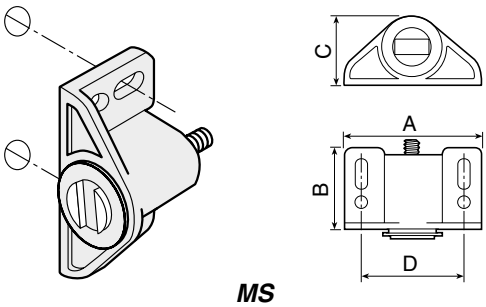

MS

Dimensions				Stock no.	Pull	Colour	Counter plate
A	B	C	D		N		
33.3	20.5	16.5	25	**MS4**	40	W	W4, W12

W = white

For counter plates please see chapter 28

PLATEX

Extra flat door lock with simple mounting:
one single screw, inclusive of self-adhesive counter plate.
The magnet is made of high-performance plastic material.The pole plates, which are flexible, rest on a shock-absorbing support, so that shocks are absorbed and possible play can be compensated.

Mounting:
One single flat screw Ø 2.5 mm. The protruding edge prevents torsion.

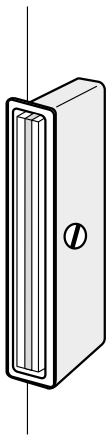

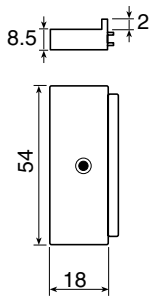

Stock no.	Pull	Colour	Counter plate
	N		
PLATEX	50	white	incl.

Magnetic door locks

This type consists of a case with totally counter-sunk screws, it includes a flexible counter plate, and is mounted on plasic supports.

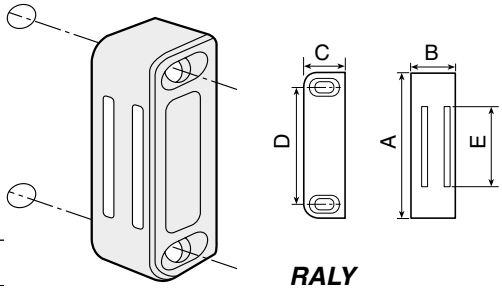

Dimensions					Stock no.	Pull	Colour	Counter plate
A	B	C	D	E		N		
35	14.0	14.0	25	13.0	**RALY3**	30	W	incl.
42	14.0	14.0	32	20.5	**RALY4**	40	W	incl.
48	14.0	14.0	38	25.5	**RALY5**	50	W	incl.
56	14.0	14.0	46	34.0	**RALY6**	60	W	incl.

This counter plate is riveted onto a plastic base. Slight flexibility ensures compensation of play. Mounting: with two round screws. Oval mounting holes permit some adjustment space.

SUPEC extra large

For large doors (wall cupboards), without counter plates

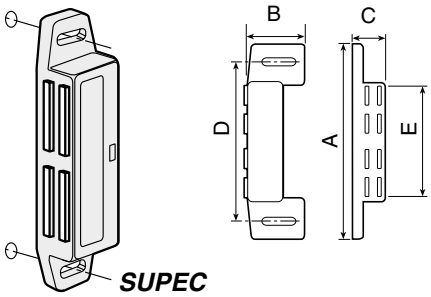

Dimensions					Stock no.	Pull	Colour	Counter plate
A	B	C	D	E		N		
74	17.5	14.0	64	43.0	**SUPEC12**	120	W	Q 10

W = white

For counter plates please see chapter 28

Edition: 5.2021
MAURER MAGNETIC®
Industriestrasse 8, CH-8627 Grüningen
Tel. 044/936 60 30, Fax 044/936 60 48
www.maurermagnetic.com/en

Special-purpose magnetic door locks

The magnets to be mounted on surfaces have flexible pole plates which automatically compensate any divergence of parallelism.

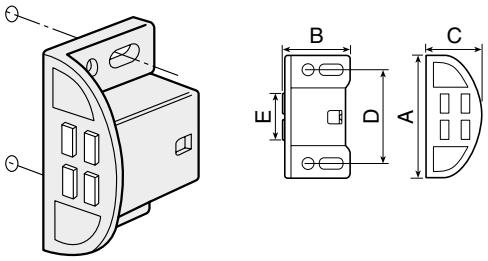

SUPEC

Dimensions					Stock no.	Pull	Colour	Counter plate
A	B	C	D	E		N		
36	20	15.5	28	13.0	**SUPEC4**	40	W	Q4
40	20	15.5	32	17.3	**SUPEC6**	60	W	Q4
48	19	15.0	38	21.5	**XB4**	40	W	QC2

W = white

For counter plates please see chapter 28

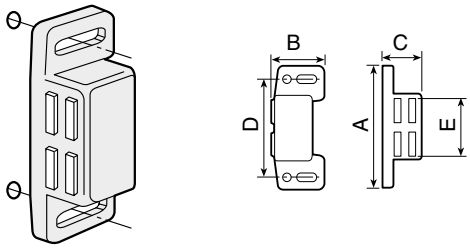

XB4

Press in magnetic door locks

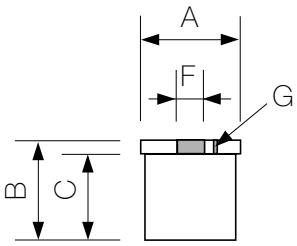

The magnets for locks are optically neutral and particularly suitable as an application to wooden furniture.

In addition to the dynamic magnetic behavior, such magnets may also be combined with each other, in order to produce additional variants of adhesive strength.

Material: ***NdFeB**-magnet, neutral tint polypropylene*

Dimensions, mm A	B	C	F	G	Stock no. ✉	Pull N	Magnetic pole	Drilling hole mm
11	10.5	9.5	3	–	**M666131**	6	N	Ø10
11	10.5	9.5	3	1	**M666132**	6	S	Ø10
11	10.5	9.5	5	–	**M666151**	12	N	Ø10
11	10.5	9.5	5	1	**M666152**	12	S	Ø10

Counter plate *type W4 (to be ordered separately, please see pages 27-13 and 27-14)*

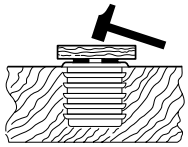

Differentiating characteristics:

Pull	*6 N*	*with central hole 3mm (dimension F)*
	12 N	*with central hole 5mm (dimension F)*
Magnetic pole	*South pole*	*with additional hole Ø1mm (dimension G)*
	North pole	*without additional hole*

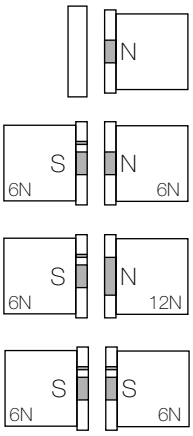

Variants of application:

Single

2 Magnets of equal adhesive strength against each other (N-pole on S-pole)

2 Magnets of unequal adhesive strength against each other (N-pole on S-pole)

Special application as a damper
2 Magnets with equal poling against each other (N-pole on N-pole or S-pole on S-pole)

Edition: 5.2021 MAURER MAGNETIC® Industriestrasse 8, CH-8627 Grüningen Tel. 044/936 60 30, Fax 044/936 60 48 www.maurermagnetic.com/en

Press in magnetic door locks

These magnets are totally counter-sunk in the wood, which guarantees a particularly sophisticated finish. For attached doors.
The cylindrical magnet has a ground front surface and is set in a plastic case. Several ribs and a covering neck ensure firm seat and precise positioning.
The front face of the «IS1.5» type is not ground: this means reduced adhesive force, but enhanced resistance to corrosion.

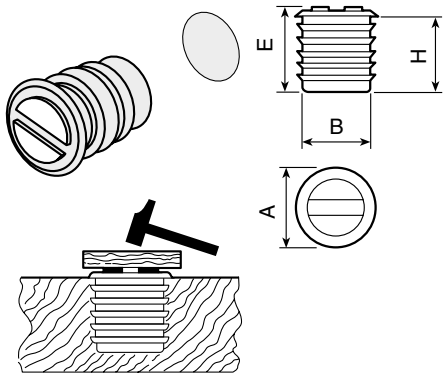

Dimensions A	B	E	H	Stock no.	Pull	Colour N	Counter plate
9.5	8.0	10.5	9.0	IS1	10	S	W4
9.5	8.0	15.5	13.8	IS1.5	15	W	W4
9.5	8.0	15.0	13.8	IS2	20	W	W4
14.0	11.0	15.3	14.0	IS4	40	W	W12
16.0	13.5	18.3	17.0	IS6	60	W	V4, W16

W = white
S = black

For counter plates please see chapter 28

Magnetic catches screwable / lockable

Temperature: max. 60°C

Stock no.	Weight g	Lift N
M616293	12.5	6
M616294	10.0	15

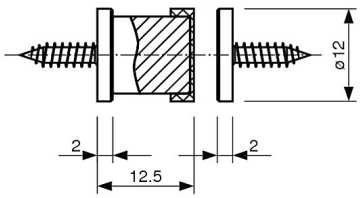

M616293

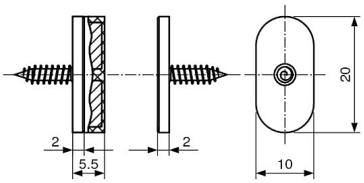

M616294

Edition: 5.2020
MAURER MAGNETIC®
Industriestrasse 8, CH-8627 Grüningen
Tel. 044/936 60 30, Fax 044/936 60 48
www.maurermagnetic.com/en

Retaining devices

Retaining devices are used to fix doors, gates, grids, partitions, etc. securely and reliably. Because they have a sufficient field of force to resist air draughts, vibrations and acceleration jerks, they are not only found in public places, but also on trains and ships. They also serve to keep machine cases in place.
The slightly flexible case compensates for possible imprecision of adjustment. The pole plates are protected against corrosion. Each retaining device is delivered together with its corresponding counter plate of the W-Series.

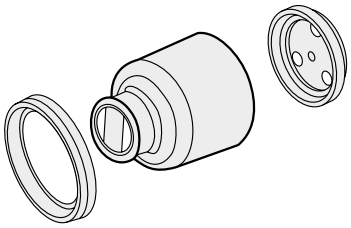

The 1-Series

With wall mounting. The compact magnet is set in a flexible plastic case.

Mounting:
The magnet case is latched to a plastic holder, which is screwed to the wall, and kept in position by means of a hasp.

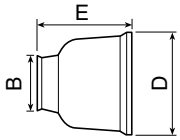

C.. -1W

Dimensions			Stock no.	Pull	Colour	Counter plate
B	E	D	✉	N		
22	43	54.0	**C22-1W**	200	H	incl.
30	70	71.3	**C30-1W**	300	H	incl.

H = light grey

Edition: 5.2020
MAURER MAGNETIC®
Industriestrasse 8, CH-8627 Grüningen
Tel. 044/936 60 30, Fax 044/936 60 48
www.maurermagnetic.com/en

The 2-Series

Mounting on a surface which is positioned parallel to the movement, e.g. on the floor. The compact magnet is set in a plastic case.

Mounting:
The magnet case is slid onto a mounting plate made of plastic, which is screwed onto the floor (or the wall). The assembly is kept in position by means of a hasp.

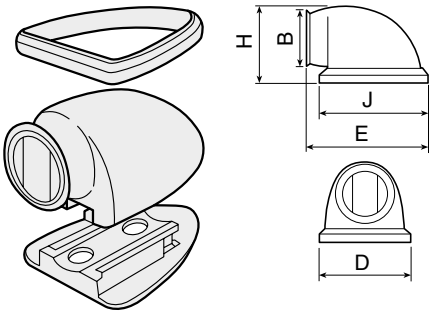

Dimensions					Stock no.	Pull	Colour	Counter plate
B	D	E	H	J		N		
26	45.5	60	38	50	**C22-2W**	200	H	incl.

H = light grey

Magnetic door catch

Temperature: max. 60°C

Execution: with round contact poles and a working angle of over 280°

Stock no.	Weight	Lift
	g	N
M616296	71	150

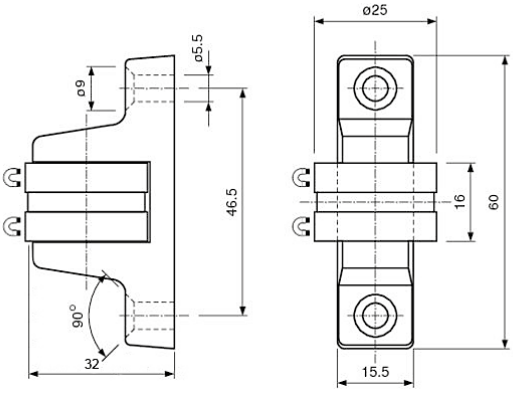

Edition: 5.2020
MAURER MAGNETIC®
Industriestrasse 8, CH-8627 Grüningen
Tel. 044/936 60 30, Fax 044/936 60 48
www.maurermagnetic.com/en

Magnetic door catch with rubber buffer

Materials: ***NdFeB,*** *plastic coated soft*

Temperature: *max. 60°C*

Execution: *black*

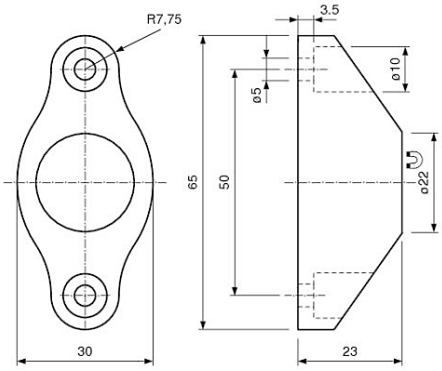

Stock no.	Weight	Lift
	g	N
M616295	22	60

Magnet with hinge

Materials: ***NdFeB,*** *plastic coated*

Temperature : *max. 50°C*

Execution: *ball stud M6x15*

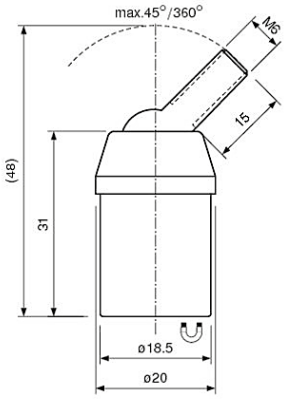

Stock no.	Weight	Lift
	g	N
M616290	45	250

Edition: 5.2020
MAURER MAGNETIC®
Industriestrasse 8, CH-8627 Grüningen
Tel. 044/936 60 30, Fax 044/936 60 48
www.maurermagnetic.com/en